FE2owlet Axial fan

for three phase alternating current, 4-4 pole

FN063-VD

Characteristic curve

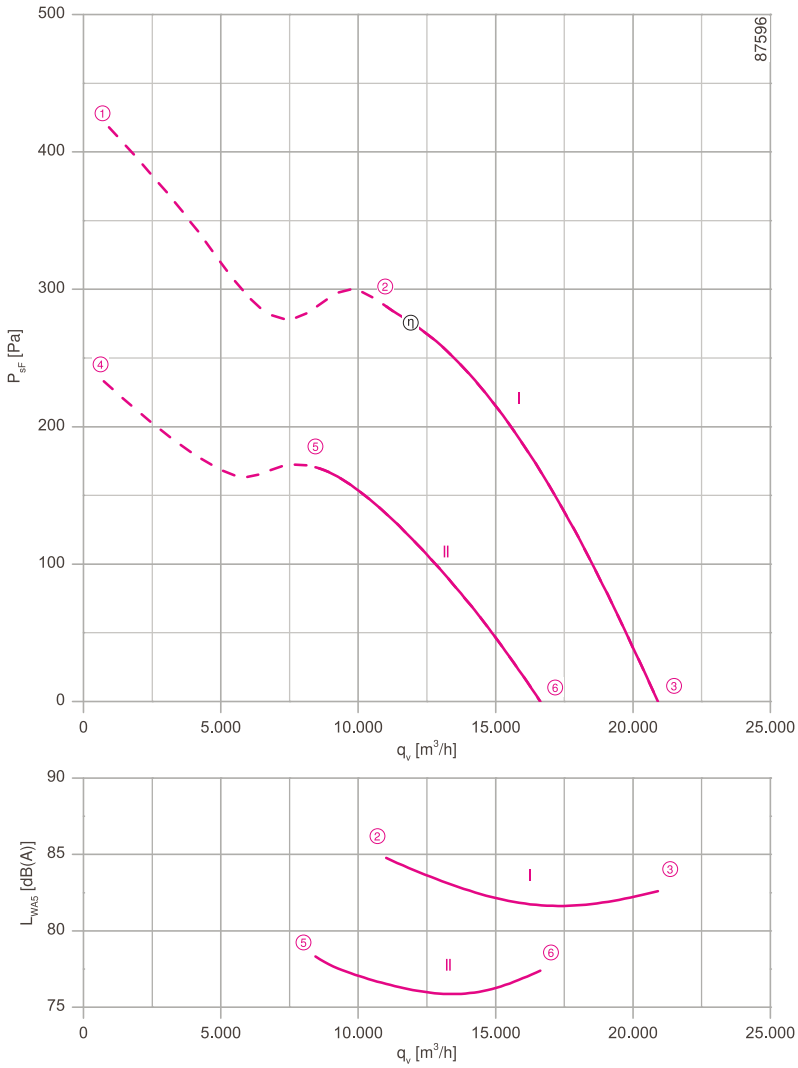

Measured in full bell mouth without guard grille in installation type A according to ISO 5801.

Description

Motor technology: AC
Rated voltage U_N: **3~ 400 V (Δ/Y) ±10 %***
Rated frequency f_N: **50 Hz***
Motor input power P_1: **2.80/1.75 kW***
Rated current I_N: **5.00/2.90 A***
Rated speed n_N: **1320/1010 min^{-1}***
Starting current I_A: 16.00 A / 5.50 A
Current increase ΔI: 0 %
Thermal class: **THCL155***
Min. permitted conveyor temperature $t_{R(min)}$: -40 °C
Max. permitted conveyor temperature $t_{R(max)}$: 60 °C
Electrical connection: Terminal box
Number of blades: 7
Protection class: IP54
Motor protection: Thermal contact
Blades: Aluminium, uncoated
Rotor: Aluminium, uncoated
Conformity: ErP 2013, CE
ErP Data
Efficiency η_{statA}: 34.4 %
Efficiency: N_{actual} = 38.0 / N_{target} = 36**
* Rated data
**ErP 2013

Connection diagram 1360-108XA Page 608

System components Page 524

Dimensions [mm]

Airflow direction V

Design K - axial bolted, mounted for short bell mouth E

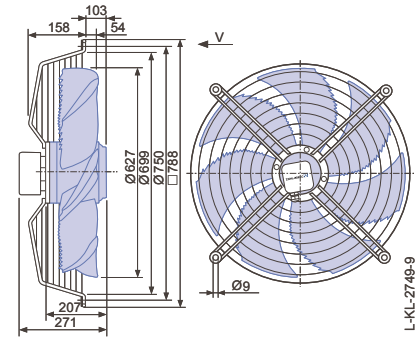

Design F - flange ring with two flanges without guard grille

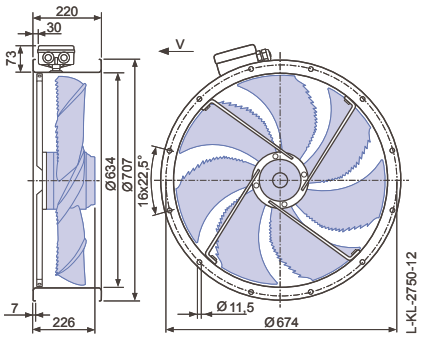

Design F - flange ring with two flanges and guard grille

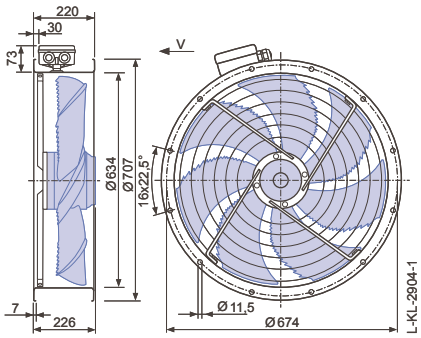

Performance data

Type	Connection	Characteristic curve	Voltage U [V]	Operating point	Current I [A]	Motor input power P_1 [W]	Speed n [min⁻¹]	Suction side sound power level L_{WA5} [dB]
FN063-VD_.6N._7P4	Δ	I	400	①	5.60	3100	1280	
			400*	②	**5.00***	**2800***	**1320***	85
			400	③	4.60	2400	1350	83
	Y	II	400	④	3.20	1900	950	
			400*	⑤	**2.90***	**1750***	**1010***	78
			400	⑥	2.70	1600	1070	77

*rated data

Fan ordering information

Airflow direction V

Design	K	F (without contact protection)	F (with contact protection)	Q
		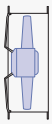	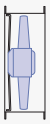	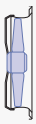
Type	**FN063-VDK.6N.V7P4**	**FN063-VDF.6N.V7P4**	**FN063-VDF.6N.V7P4**	**FN063-VDQ.6N.V7P4**
Article no.	**156355**	**156358**	**156359**	**156356**
Weight [kg]	31.50	35.80	36.60	41.60

Control technology

Frequency inverter Fcontrol 3~	Motor protection units 3~	Transformer-based controllers 3~	Electronic voltage controllers 3~
Page 558	Page 596	Page 591	Page 578
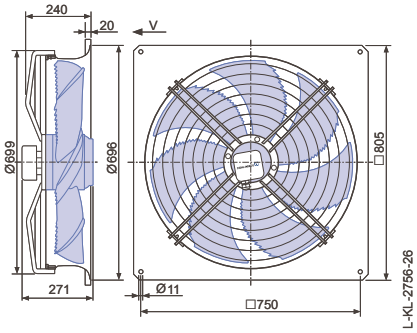
Design Q - square, full bell mouth