NRH2-50-186Y

Data sheets

Semi-hermetic compressors for remote oil separator > RTS and NR series for external oil separator / for HFC - HCFC - HFO

Technical data:		
Rotors	#	2
Displacement @ 50 Hz	m3/h [50Hz]	186
Displacement @ 60 Hz	m3/h [60Hz]	223.2
Compressor version[1]		2
Motor power (HP)		50
Motor power (kW)		37
Motor voltage at 50 Hz[2]	V/ph/Hz	400 (+/-10%) V/3/50Hz PWS
Motor voltage at 60 Hz[2]	V/ph/Hz	460 (+/-10%) V/3/60Hz PWS
PWS partition		50-50
Capacity control (CC) step	%	100-75-50
MRA, maximum operating current at 400V/50Hz and 460V/60Hz	A	71
LRA, maximum starting current at 400V/50Hz and 460V/60Hz, PWS motor	A	256
LRA, maximum starting current at 400V/50Hz and 460V/60Hz, PWS motor with DOL connection	A	440
Max power consumption	kW [@ 50Hz]	43.6
Frequency min	Hz	30
Frequency max[3]	Hz	70
Protection device		INT69 FRYL Diagnose
Enclosure class		IP65
Maximum pressure HP	bar	30
Maximum pressure LP	bar	20.5
Oil type[4]		POE 170 cSt
Sight glass for oil circuit		Standard
Solenoid valve for oil circuit		Standard
Oil water cooling		Standard
Integrated check valve		Standard
Maximum discharge temperature sensor		Standard
Suction valve (SV) mm	mm	79.4
Suction valve SV inch	inch	3" 1/8
Discharge valve (DV) mm	mm	54
Discharge valve DV inch	inch	2" 1/8
Net weight	kg	244
Length	mm	996
Max Width	mm	484
Maximum height	mm	551
Compressor body material		Cast Iron

[1] Motor version: 1, high and middle temperature, all refrigerants; 2, low and middle temperature, all refrigerants; 3 ECOinside, low temperature, only R134a and R1234ze
[2] Other available on request
[3] Maximum frequency depends from the working condition: see FSS3 (Frascold selection software)
[4] Different kind of oil available on request

NRH2-50-186Y

Data sheets

Semi-hermetic compressors for remote oil separator > RTS and NR series for external oil separator / for HFC - HCFC - HFO

Accessories:	
DOL bridge bars	T00WK1202
Rubber vibration absorber kit	Standard
Economizer connection kit	T00WK460
Electronic filetr clogging switch	T00WK151
Optical filetr clogging switch	T00WK150
Oil separator	See if You need and the selection on FSS
Nipples for oil cooler connection	T00WK1450

NRH2-50-186Y

Data sheets

Semi-hermetic compressors for remote oil separator > RTS and NR series for external oil separator / for HFC - HCFC - HFO

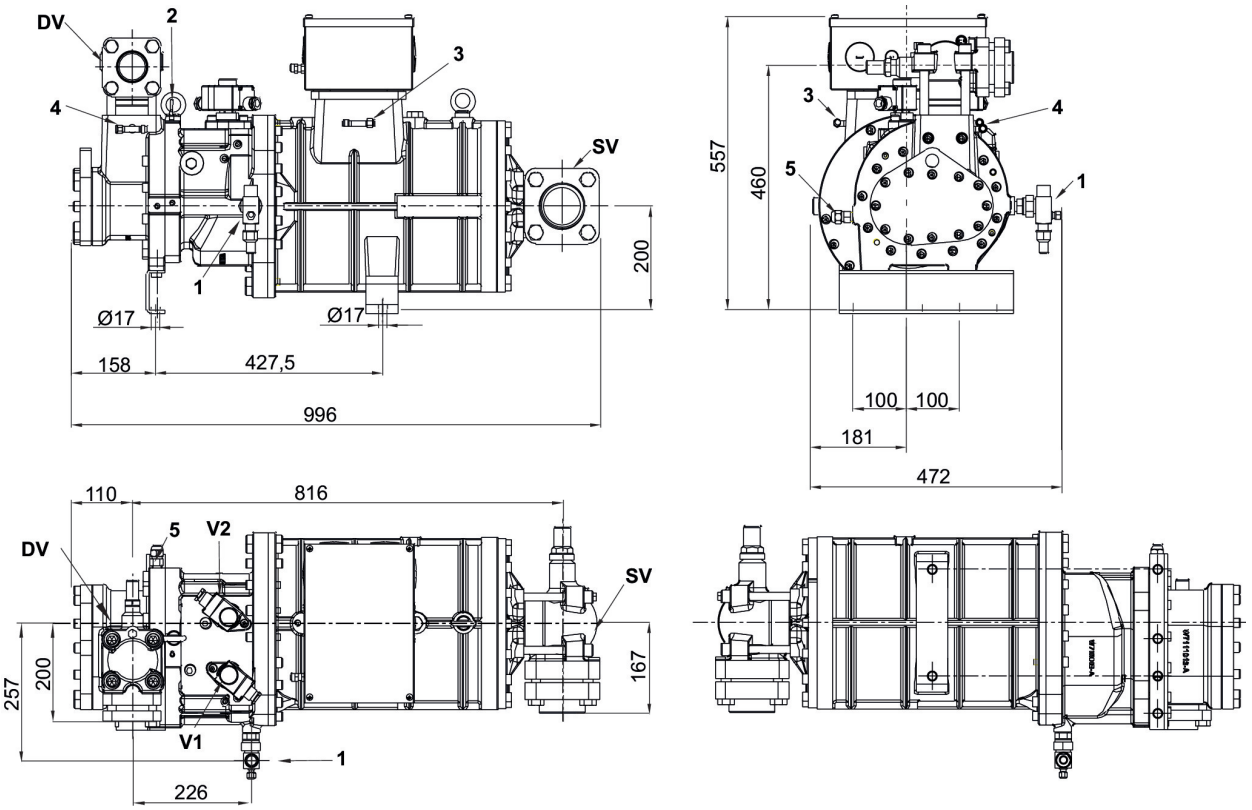

Dimensional drawing:		
SV	Suction valve	79.4mm - 3"1/8
DV	Discharge valve	54mm - 2"1/8
1	Return oil valve	-
2	Max. discharge temperatur sensor	-
3	Low pressure connection	-
4	Low pressure connection	-
5	Connection for ECO/liquid injection	-
V1	Capacity control valve (step 1)	-
V2	Capacity control valve (step 2)	
NP	Name plate	-